Bucksport Economic Development Committee Meeting

Thursday, January 5, 2017

5:00 PM

Bucksport Town Office (Council Chambers)

AGENDA

1. Roll Call:

□ David Kee	□ Paul Rabs	□ Peter Stewart
□ Andy Lacher	□ Jim Boothby	□ Joel Wardwell
□ Butch Osborne	□ Linda Plourde	□ John Wardwell
□ Mark Eastman	□ Frank Dunbar	□ Daphne Eyerer
□ Larry Wahl	□ John Paul LaLonde	□ Ron Russell

2. Review Minutes: December 1, 2016

3. Public Participation

4. Code Enforcement Officer Update - Jeff Hammond

5. Economic Development Director Update - Rich Rotella
   a. AIM Update from December 8th (see attachment)

6. Community Update
   a. RSU 25 -
   b. Chamber of Commerce -
   c. Main St Bucksport -
   d. Heart & Soul -

7. New Business
   a. Request purchase of land & building US Route 1 – Steve St. Peter (attachment)
   b. Request for benches on Main St – Senior Resource Committee
   c. Request from Main St Bucksport for use of TIF funds to hire coordinator (attachments)
   d. Service Year (attachment)

8. Old Business

9. Adjournment

Minutes, Bucksport Economic Development Committee – December 1, 2016

Attending: Paul Rabs, Jim Boothby, Linda Plourde, Mark Eastman, Frank Dunbar, Daphne Eyerer, and Rich Rotella.

Paul Rabs called the meeting to order at 5:00pm. Mark made a motion to accept the September and November minutes and Daphne seconded the motion. The motion passed 6-0.

Business Incubation Presentation: Roger Ferrell introduced himself (has a background in economic development) and explained how he brought church group up from South Carolina to volunteer in Bucksport. He presented to the group on a business incubator project (bGen which he and others collaborated on in South Carolina) where they received a $180k federal grant to begin their work. City provided the building which was pretty derelict and they did the work to fix it up and turn it into office/meeting space. Roger handed out a 2 page document (attached) about bGen. He stated the oldest entrepreneur in bGen is 66 years old and the youngest is 14 years old. He said 75% of the space in the building is open space but there is some closed space (a conference room and another little private area in the building) and that the building is available 24 hours. Business pays $150/month rent for 1st year and then $200/month for the second year and by then they should be up on their feet. 85% of their funding is external funding. Linda asked how this hooked up with our schools. Roger said it is up to our school system how they want to be involved.

Code Enforcement Officer Update: Jeff Hammond updated the group on planning board activity. Last month held a public hearing on Appendix K (Land Use Ordinance). The Council approved all the changes even the one the Ordinance committee declined. This month they will be looking at application for Great Pond Mountain Trust (creating a trail system on Upper Long Pond Road). The Site plan shows parking but they require more and they are interested in using the town's sludge facility on Upper Long Pond Road but the problem is that it is 1 mile from the trail head. He is also going to share with the board a letter he has drafted to the DEP asking preliminary approval of changes for dimensional standards in the Shore Land Zone. Right now any individual use has to be provided with a minimum amount of lot area and shore frontage. Many of the lots have no shore frontage and don't meet minimum land area which makes it extremely difficult to expand the uses. The letter is proposing we eliminate the dimensional standards altogether for properties in Downtown Shore Land District only. If planning board approves the letter will be sent to DEP. Another letter going to the planning board is coming from the Friends of Silver Lake commenting on board's approval of expansion of cemetery on Silver Lake Road. He said another part of Town Code being worked on now is Chapter 6 (Business Licensing) and has gone to Ordinance Committee. The only change they wanted to make is in fee schedule because right now new & renewed businesses licenses owners pay the same fee. He has drafted up language that will cut the cost in half for a business renewal license. He said the Ordinance Committee didn't want any fee for a license renewal, so they wanted that deleted which means that the entire revenue stream for license stream will go away because most of revenue is from renewals not new ones. He did more research into it because something didn't seem right so he checked with legal counsel who felt there would be constitutional issues there (equal and fair treatment). There has to be a good reason for waiving a fee for one application and not for another. There really is no good reason for doing that. He will be sharing information with the Town Council because it is being introduced to them and see if they want fees back in ordinance. Jeff sent a letter to a local business on Heritage Park Rd which has opened another business (U-Haul business) that needed to be permitted and wasn't permitted. There were signs put up that need permitting and they weren't permitted. They will be receiving a letter from him asking them to come in and talk to him about getting permits that are needed for the business. The Leadbetter Project is moving along but there have been some issues with

flooding recently and he met with officials from DOT and they couldn't identify problems except it is a construction site and the final drainage features aren't permanently in place there. The contractor on site is doing what they can to minimize any flow of water off site. The neighbor on that side was concerned about the impact of the water going into the basement of his building. On the other side of the lot the neighbor was concerned about trees being taken down but the trees were taken down yesterday and he wasn't sure where that was going to go. Mr. Leadbetter's surveyors are convinced where they put the pins is in the right place and that puts the trees on the Leadbetter property. The final update is that Wilson Hall was broken into the week before last they did substantial damage to the temporary door that was put in on the Franklin Street side. He said that door had to be replaced so they took care of that last week. He said there was no damage done inside but there was a flood light that was stolen. He has put out an ad for developer's who may be interested in the project. He said he hasn't published it yet but will probably do that at some point in time. The building still needs work done on the roof badly to prevent the water from coming in and that is going to take a huge commitment before that work can be done.

Economic Development Director Update: Rich said that he, the town manager and mayor met with Senator King and other members from the EDAT tour here at the Town Office and then toured the AIM properties. Senator King was going to reach out to President Brennan at MMA that message was delivered and shared with the Board of Trustees at their November 11th meeting. At this time no decision has yet been made on the project. Rich assisted with Election Day on November 8th and commented how smooth the process was and that all of the volunteers demonstrated fantastic teamwork. On November 10th, Rich accepted the 2016 Innovation and Creativity Award from DART for Paula Kee and Wednesdays on Main. On November 21st, Nancy Minott took over as the new coordinator for Bucksport Heart & Soul. The Town Council approved a resolve to fund the position with a $20,000 stipend which would last until the end of December 2017. The group has made great progress and this transition will free Rich up to spend more time with Community & Economic Development. On November 28th, Rich spoke with Jeff McGlin who stated he would attend the December 8th Town Council Meeting and give a brief presentation on the status of the work done on the AIM property. Also on the 28th, Rich met with Amy Powers, director of Cruise Maine USA and they discussed the MS Fram. The dates for the call to port are late afternoon Sunday, May 6, 2018 until mid-afternoon May 7, 2018 and to repeat the call on Thursday, October 11, 2018 to Friday, October 12, 2018. We also found out that the American Cruise Line boats don't have any trips scheduled to Bucksport for 2017. The Independence doesn't set a schedule for Bucksport it docks here in inclement weather and the American Glory has been decommissioned and replaced by the American Constellation, a lager cruise ship whose schedule hasn't been set as of yet. Rich updated the group that Tara Law has moved into the Chamber building at the cost of paying her portion of utilities and no rent. He updated the group on all of the holiday activities planned for the month of December including December 8th a Special Night Out Downtown from 5-7 with live music and stores staying open later, December 10th @5pm the First Annual Parade of Lights beginning at the former mill parking lot and going to the Town Office, December 16th a Holiday Cocktail Party hosted by Main St Bucksport at the LaLonde house on Elm St., and December 18th free gift wrapping by Main St Bucksport in the Heart & Soul Building on Main St. Rich let the group know that Bucksport High School is going to be the host for the Maine State Class B Wrestling Championships on Saturday, February 18, 2017. Finally, Rich wanted to let everyone know that he completed his first year of service on November 30th and that he was very grateful to have been giving the opportunity to serve the Bucksport Community.

RSU 25 Update: Jim said the RSU is trying to attract more of the regional and state activities for the school (such as the Class B Wrestling Championships) to help bring more people into the community. Also, this past Monday, he was appreciative for Rich, Sue, and Peter Stewarts time to meet with the leadership council for the schools. The whole focus of the meeting was on the role of the schools and economic development. Jim has had this conversation with his administrators but actually to bring it to

the teachers was a unique opportunity. A lot of the teachers were taken back with a perspective that they hadn't really considered and they know the role they play in the community. We will continue to provide this opportunity for the leadership team. 6 years ago school system did away with department heads and incorporated the leadership team. Jim provided the group with a first draft of RSU 25 Strategic Plan Update (included with minutes). Letters will be going out to the public in all 4 communities after the New Year to provide them with an update to the strategic plan. There will then be opportunities for citizens to respond to a short survey and they are checking the temperature of making sure they are still lined up with the values and beliefs of the communities. It can be accessed through technologies, events in community, at sporting events through winter & spring with the goal being that when school returns in September a second draft will be complete.

Chamber of Commerce Update: Rich updated that the Turkey Trek just completed which was the last chamber sponsored event of the year. Also, he mentioned that Wreaths Across America is December 11th with the convoy coming through around 11am and there will be no stop in Bucksport this year.

Main St Bucksport Update: Mark announced that the group has received it 501-C3 status. He said they opened their own checking account so the Town is no longer their Fiscal Agent.

Heart & Soul Update: Rich said that a youth group was formed with roughly 10 students from the high school. The group will be entering a float in the parade.

New Business: Rich introduced the idea of a Splash Pad to the group and that he and his intern would do research for the project.

Old Business: None

Adjournment: Linda made the motion at 6:05pm and it was seconded by Mark.

Submitted by Rich Rotella

Next BEDC Meeting is scheduled for Thursday, January 5th @ 5:00 pm

Council Chambers at the Town Office!

AIM Development
Bucksport Project Update

December 8th 2016

Jeff McGlin

AIM Development Update

- Demolition update
- Power plant update
- Environmental site review
- Dam and water levels
- Redevelopment options

Demolition update

- Independence 90% finished on phase 1.
- Phase 2 SLODA and updated demolition permit approved
- Started phase 2 in Nov – crew size approx 17
  Demolition completion (phase 1& 2) in May 2017
- Progress is very good. Aerials for view at the end
- Site map of phase 2 next slide (reference office building and RR track for orientation). Demo scope for phase 2 in yellow

Phase 2

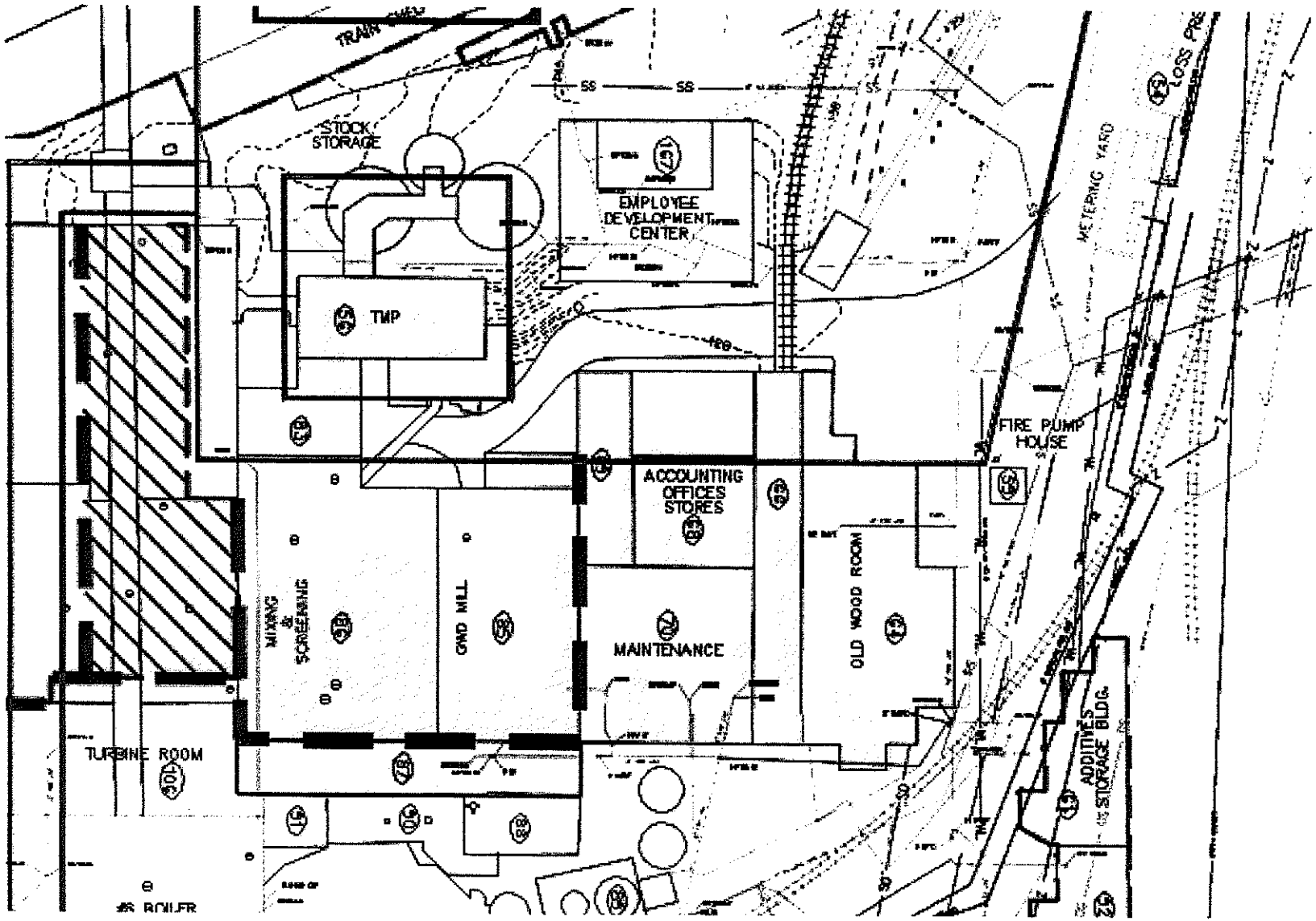
TRAIN
STOCK STORAGE
TMP
EMPLOYEE DEVELOPMENT CENTER
METERING YARD
LOG PILE
FIRE PUMP HOUSE
ACCOUNTING OFFICES STORES
MIXING & SCREENING
GRID MILL
MAINTENANCE
OLD WOOD ROOM
ADDITIVES STORAGE BLDG.
TURBINE ROOM
BOILER

Power plant update

- Plant is merchant market plant / bid daily into market
- Challenging economic market conditions (low gas / elec prices) and transmission constraints
- Gas turbine is now simple cycle / fast start
- Reviewing all capacity markets
- Utilities and structure 90% separated from paper mill for stand alone power plant

Environmental Site Review

- Campbell Environmental Group clarified scope and completed Phase 1
- Phase 1 report / summary was submitted to State / DEP
- No further investigations planned.

Dam and Water levels

- Dam and water levels are good
- Fall levels have been on the high side but OK
- Dam maintenance work completed in fall was:
- Toddy Pond - Underwater concrete patch work on up stream side. Both down stream side walls reinforced and patched.
- Alamoosook - Concrete and grout installed for additional support of down stream side waterway and fish ladder support. Also rip rap stone installed in both locations
- Silver lake – site clean up and vegetation removal

Site redevelopment

- Continuing to review site redevelopment options
- Maine Maritime Academy reviewing their business plan for project at our site
- Recently met with Sprague to review their adjacent site
- Continue to meet with many groups ranging from power projects to small manufacturers to warehousing. No firm redevelopment plans, but a lot of activity
- Rail / truck / barge options seem to fit site well

Questions???????

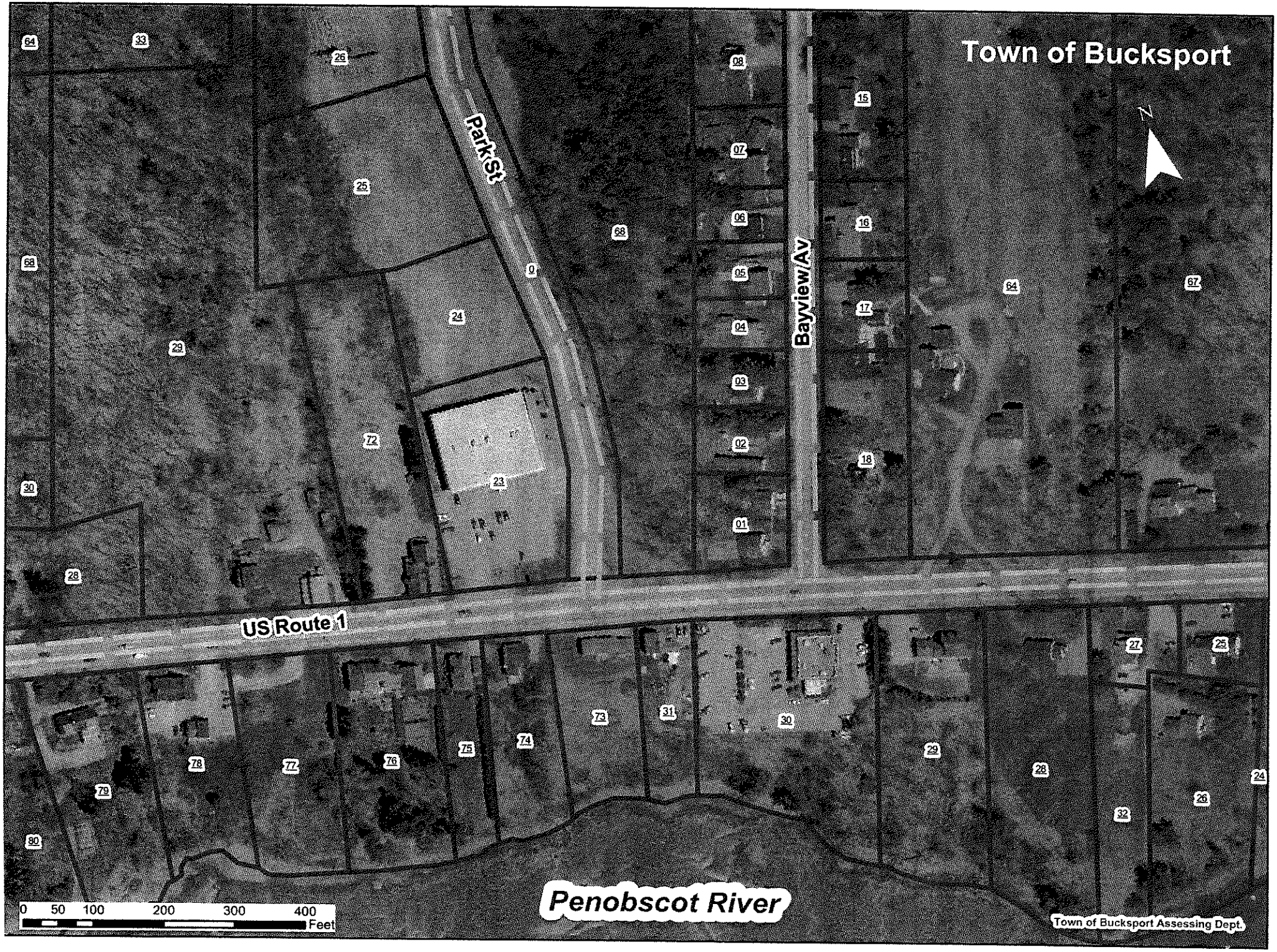
Town of Bucksport
N
Park St
Bayview Av
US Route 1
Penobscot River
0 50 100 200 300 400
Feet
Town of Bucksport Assessing Dept.

Park Avenue Straight Back Strap Metal Bench, 6'

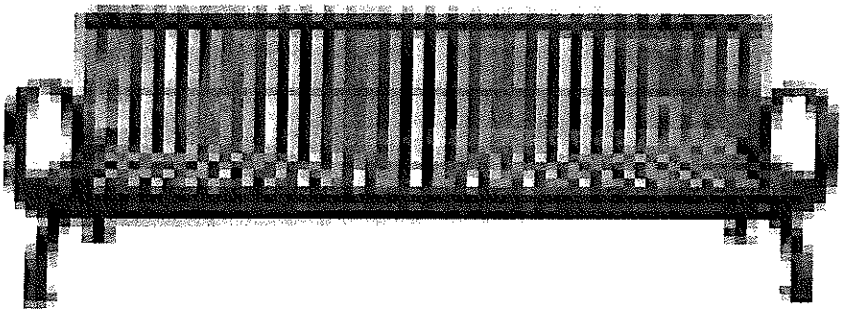

- The Park Avenue bench is built with high-quality, commercial-grade steel manufactured in the US and welded by certified experts.
- Heavy-duty 3/8" crossbraces, back supports and center rods combined with 1-1/2" thick pipe seat rails provide a strong, reliable understructure.
- Zinc coated steel will not rust or corrode.
- The entire bench is electrostatically powder-coated to provide a hardy, durable finish that is weather resisWhitet and retains its luster for years.
- Center arms are optional.
- If you want a sophisticated and indestructible metal bench with a comfortable curved seat design and a supportive back, then select the Park Avenue Straight Back Strap Metal Bench.

Product

6' Park Avenue Straight Back Strap Metal Bench

Model: 543-1099

Materials:

6-ft. Cast Aluminum Frame and Outer Arms
Steel Strap Seating Surface
1-1/2" Schedule 40 Pipe Rails
3/8" Gauge Mild Steel Crossbraces
3/16" Gauge Mild Steel Slats
3/8" Steel Rod Center Brace

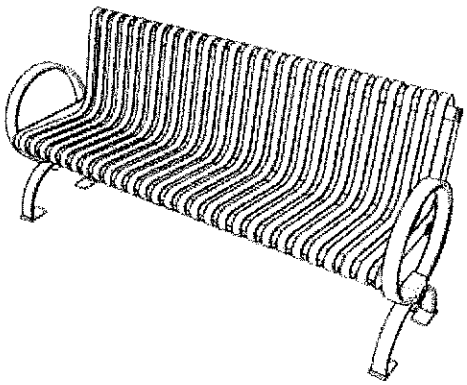

Finishes:

Powder Coat
Our Powder Coat Finish assures a high level of adhesion and durability by following these steps:

1. Sanded Down
2. Washed and Dried
3. Zinc Primer
4. Powder Coat
5. UV Clear Topcoat

Color Options:

☐ **Standard Color**
Black | Silver

☐ **Custom Color**
Brown | Red | Green | Blue
Other: _____

Mount Options:

☐ **Free-Standing**

☐ **Surface**
Foot Mount has a 9/16" mounting hole for mounting to the ground

Arm Options:

☐ **With Arm**

☐ **Without Arm**

Top View

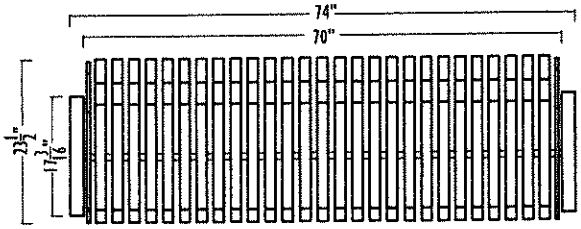

Front View

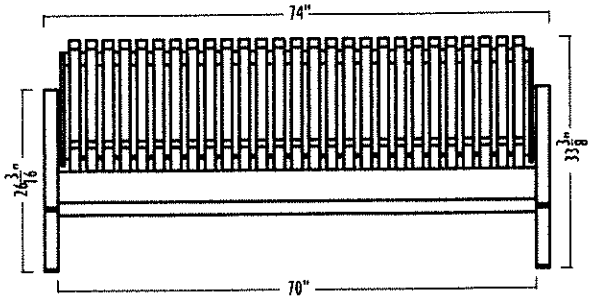

Side View

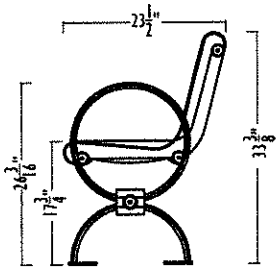

3350 NW Boca Raton Blvd., Suite B2, Boca Raton FL, 33431
1-866-280-9894 | Sales@theparkcatalog.com

MAIN STREET BUCKSPORT

December 28, 2016

Background:
Main Street Bucksport (MSB) formed in the fall of 2014 shortly after the announcement of the closure of the Verso paper mill. We are a group of all volunteer Board members comprised of local business owners and citizens who are committed to the revitalization of downtown. In today's changing economy, many people can choose to live wherever they want; the decision isn't necessarily tied to a physical work location. Instead, both working people and retirees are drawn to creative communities that are friendly and welcoming and have unique, locally owned businesses and events that cannot be found elsewhere. Bucksport has already made great strides in meeting these goals and we believe that a Main Street program can help move the community even further by using nationally proven methods to revitalize and improve the downtown area.

Main Street Bucksport is a 501c3 non-profit organization with a mission to support existing downtown Bucksport businesses, attract new businesses to the downtown area, and to create and promote cultural arts events downtown. MSB is a network community of the Maine Downtown Center, a program of the Maine Development Corporation. Through their work with the Maine Downtown Center, several Maine towns have seen real and measurable impacts in their downtowns including new businesses, increased success for existing businesses, and exciting and fun cultural arts events that bring people downtown, to the heart of their community.

The proposal:
Main Street Bucksport is requesting $10,000 from the TIF (Tax Increment Financing) fund to pay for expenses from January-June 2017. In the spring, Main Street Bucksport will request $20,000 from the Town to support annual program costs and to allow us to hire a part-time Executive Director. Ideally, we would like a 3-year commitment from the Town which we believe will allow us to leverage additional grant funding and ensure long-term success. However, since the Town funding will not be available until July 2017, we are seeking a one-time allocation of TIFF funds to pay for program expenses from January –June 2017.

The attached document outlines the 2017 events that MSB has committed to at this time. They include the Bridge the Gap Race, the Bucksport Arts Festival, and the International Maritime Film Festival. Additionally, MSB will continue to help coordinate and promote downtown events during the important holiday retail season. Neither the Bridge the Gap Race or the International Maritime Film Festival would happen if Main Street Bucksport had not agreed to be the local non-profit partner and both events have proven success records that mean real economic development for the Town.

The attached draft budget outlines the 2017 Main Street Bucksport income and expenses projected for 2017.

Thank you for your consideration.

MAIN STREET BUCKSPORT

2017 Activities

Bridge the Gap Race – April

Now in its 6th year, Bridge the Gap draws approxamately 500 runners to the area each spring. Beginning in 2017, Main Street Bucksport will be the local organizer of the race and Gary Allen (founder of Mount Deserrt Island Marathon) will be the race director. The race will finish somewhere in downtown Bucksport (course to be determined.)

Bucksport Arts Festival – August

Main Street Bucksport is partnering with Lyndsey Marston and Laurie Brooks (founders of the Arts Fest) to provide fiscal sponsorship and help promote the festival.

International Marine Film Festival – September

Main Street Bucksport is partnering with WoodenBoat Publications to the bring the 2nd annual International Maritime Film Festival to Bucksport. The festival will be held at the Alamo Theatre. Last year's inaugeral festival brought in $11,000 in revenue and brought 100 people to downtown Bucksport over festival weekend. Restaurants and local shops saw a significant increase in business.

Christmas Activities Downtown - December

Main Street Bucksport has helped to coordinate downtown holiday events since our inception in 2014. This year, MSB took the lead in helping to coordiante several events including those sposnored by the Town and indiviudal business owners. BookStacks reported record sales on Small Business Saturday in 2016.

2016 saw the creation of community and fundraising events, the Main Street Bucksport website, and the acquisition of 501 (C)(3) status, substantially underwritten by a grant from the Maine Community Foundation and other donations. Year to date, Main Street Bucksport has $8,000 in the bank from fundraising events and grants.

Maine Downtown Center recommends that Main Street programs use a funding model of 1/3 Municipal support, 1/3 Grants & Fundraising, 1/3 Business & Private Donation.

A long term (3 year) commitment from the Town will strongly position Main Street Bucksport on grant applications, as well as provide a solid footing for the operations to go forward. This organization is committed to the redevelopment and advancement of the downtown Bucksport corridor, in any way that benefits our local businesses and the entire community, and using techniques that have seen great success in other Maine towns during times of transition.

	Main Street Bucksport Budget 2017			notes
Income				
	MSB Fundraising Events			
		general	$10,000	
		Bridge the Gap	$11,000	
		Arts Festival	$6,050	
		IMFF	$15,525	
	General Donations		$1,000	
	Town of Bucksport		$20,000	
	Grants		$5,000	
	Membership		$2,000	
	In-Kind			
		office space	$6,000	includes heat & electricity
Total Income			$76,575	
Expenses				
	Personnel			
		Staff Wages	$25,000	
		Social Security	$1,550	
		Unemployment	$1,120	6% of first $7,000
		Workers Comp Ins.	$405	
		Total Personnel	$28,075	

	Insurance			
		libabilty	$433	
		D&O	$1,000	
	Equipment		$1,000	
	Office expenses			
		phone	$1,000	
		suplies	$1,000	
	Publicity		$1,500	
	Fundraising Events			
		general	$4,000	
		Bridge the Gap	$9,000	
		Arts Fest	$4,765	
		IMFF	$9,000	
	Website support		$500	
	Professional Development		$500	
	Maine Downtown Center Dues		$500	
	In-Kind			
		office space	$6,000	
Total Expenses			$68,273	
Profit/Loss			$8,302	

Service Year Impact Community Program Overview

"I'm calling for a few cities across the country to step up and lead...What if, upon graduating from high school, every young person in these cities is given an opportunity to complete a service year with other young people? Creating model towns and cities of service across America could provide powerful local examples that capture our collective imagination and create ripple effects for more service opportunities."

– Stan McChrystal: A million young people to empower America in CNN, February 4, 2015

About Service Year Alliance

Service Year Alliance is working to make a year of paid, full-time service – a service year – a common expectation and opportunity for all young Americans. A service year before, during, or after college – or as a way to find your path – gives young people the chance to transform their lives, make an impact in their community, and become the active citizens and leaders our nation needs. Expanding service years has the power to revitalize cities, uplift and educate children at risk, and empower communities struggling with poverty. It can unite the most diverse nation in history, binding people of different backgrounds through common cause. Service Year Alliance is asking nonprofits, higher education institutions, cities and states, companies and foundations, policymakers of both parties, and people of all ages to join the movement. Learn more at serviceyear.org.

Service Year Impact Community Initiative

Service Year Alliance is committed to supporting local communities in their efforts to build and/or scale service year positions. The Service Year Impact Community initiative will identify a diverse cohort of communities who demonstrate a willingness to take concrete steps to develop and implement plans to grow the number of service year opportunities and build demand for these positions. The Service Year Impact Community initiative works with local leaders to help them build the infrastructure necessary to host and support service years at unprecedented levels.

Impact Communities will be recognized as leaders and innovators in the service movement inspiring, other communities to step up and follow their lead. Communities selected to receive recognition as a Service Year Impact Community will have the opportunity to showcase their efforts and associated learnings on a national stage in order to serve as role models for communities throughout the country.

The Impact Community initiative will provide communities and Service Year Alliance with the opportunity to demonstrate and accelerate the impact service year members have in communities in which stakeholders have come together. Service Year Alliance seeks to establish a diverse cohort in order to demonstrate examples that may be useful for communities nationwide.

What is expected of an Impact Community?

Impact Communities commit to:

- Develop and implement a comprehensive Service Year plan to dramatically increase the scale (1 position per 300 residents) and quality of service year programs in their community.
- Set or reaffirm a target to expand by at least an additional 100 positions but are encouraged to set a more aggressive near term goal (1 position per 300 residents) by 2019. Communities are also encouraged to set a longer term goal that demonstrates their long term commitment to serving as a Service Year Impact Community.
- Document and elevate best practices and lessons learned and enhance the potential for replication in other communities.
- Utilize the Service Year Exchange for recruitment by actively working to get all service year programs in a community registered with Service Year.
- Be an active part of a network of communities working to realize service years at scale by participating in peer learning and networking.

What benefits will an Impact Community receive?

- Recognition and national visibility.
- Access to a unique peer network and community of practice consisting of other communities identified through this initiative.
- Invitations to Service Year Alliance meetings and events.
- Guidance and support such as feedback on service year growth plans.
- Connections to learning opportunities and promising practices.
- Web-based training opportunities and online tools and resources.
- Customized recruitment page on the Service Year Exchange at a discounted rate.
- Recruitment resources such as promotional packets and graphic design support for regional recruitment campaigns.

In some instances, intensive consulting, on-site technical assistance and/or funding opportunities may be awarded through a competitive process.

Applicant Eligibility

Due to the nature of the initiative, activities are likely to be carried out by a variety of organizations and organization types. Eligible applicants for Service Year Impact Community initiative are: units of local government, nonprofit organizations, or a community foundation.

How to Apply

To apply, please submit a narrative and letter(s) of support to Mayo Sonko, msonko@serviceyear.org. See the application instructions for further details and timelines. If you have any additional questions, again please contact Mayo Sonko at msonko@serviceyear.org.

Advocating for Maine's Public Schools

December 19, 2016

Introduction

For most who live here, the State of Maine is the only place we want to call "home". Small, close-knit communities, plentiful recreational opportunities, safe schools and neighborhoods, and generations of family and friends are the qualities that attract many of us to our native state. However, Maine is facing a crisis; our population is aging and declining, our economy is flat, and our workforce will not be able to meet the demands of our existing employers within the next few years. Attracting potential workers and business owners to Maine is a difficult challenge, as the data reveals:

- According to *Forbes* magazine, Maine ranks 49th out of the 50 states in our nation in terms of business climate[1];
- *Business Insider* places Maine's economic strength 46th in the U.S. when considering measures such as unemployment, gross domestic product per capita, average wages, and house prices[2];
- The Kaiser Foundation reports that Mainers earn 12% less than the U.S. average income, with residents in only ten states earning less[3].

On virtually every economic or governmental indicator used to measure a state's performance in comparison with others, Maine performs worse than the national average and is typically closer to the bottom than the middle. The result: a stagnant economy, a diminished workforce, a lack of new business, a population in decline.

There is one sector of the state's economy, though, where this is not true – a vital sector that performs above the national average and should be a drawing card for new businesses, new workers, and new families. That sector is Maine's public schools. On a variety of commonly accepted points of comparison, Maine schools perform above the national average – entering the top quartile in some instances – and Maine's school districts do it with fewer non-instructional employees and for less money than most other states. The truth about Maine's academic performance and locally-controlled schools should be celebrated, preserved, and publicized far and wide to attract young workers, business owners, and developers to our state, thereby bolstering and buoying Maine's economy for decades to come.

Academic performance data

Maine schools score well above the national average on a wide variety of academic measures at various grade levels:

- Results from the National Assessment of Educational Progress (NAEP), administered to students in all 50 states in grades 4 and 8, show Maine 4th graders performing above the U.S. average, ranked #14 in mathematics and #20 in reading. Eighth-graders performed slightly better, at #11 in mathematics and #14 in reading[4];
- At the high school level, Maine's graduation rate of 87.5% is well above the national average of 83.2%, placing the state #11 in the country[5];
- In 2014, the Annie E. Casey Foundation ranked Maine's schools 14th in the U.S. using a matrix of academic measures[6].
- A recent article in U.S. News and World Report ranked Maine's high schools #7 in the U.S.[7].

These are not the marks of failing schools – especially in a state that ranks near the bottom of the nation on most other economic indicators. These are the marks of organizations performing better than the data would predict. One reason for this better-than-expected performance is the fact that Maine school teachers and leaders are not content with the current or past results; they do not consider beating the national average to be good enough, and they are continually striving to provide improved instruction and programming to Maine's students. The message has been sent to Maine's educators, consistently and forcefully, that they need to do better – and that message has been received. The result is an educational system that outperforms most others in the country.

We should recognize the excellence that already exists in our schools while focusing our energies on continual improvement. While Maine educators are rising to that challenge, the state has not celebrated the fact that its schools perform better than much of the rest of the country. Community leaders throughout Maine must realize that the data does not lie; Maine schools are doing quite well, comparatively. Telling that story to the public will not cause Maine educators to stop finding ways to innovate instruction, nor will it stop their effort to create greater efficiencies in our schools; it will simply encourage them to do so with a sense of accomplishment and optimism while at the same time encouraging prospective residents and business owners to consider Maine as a preferred place to raise their families and grow their businesses.

Expenditure data

Going beyond student performance comparisons, Maine's schools fare well when stacked up against the rest of the U.S. on financial measures:

- A recent study published by *EdWeek* ranked Maine public schools 14th in the nation when considering financial management as one key measure[8];
- Despite popular political rhetoric claiming otherwise, Maine schools are the most efficiently operated in all of the northeast, including all six New England States, New York, New Jersey, Pennsylvania, Delaware, and Maryland. One would have to drive south to Virginia or west to Ohio before finding a state with lower per pupil expenditures than Maine[9];
- According to a report published in the *Huffington Post*, Maine ranks 31st in per pupil spending while performing at #17 academically[10];
- The National Education Association's 2016 "Rankings & Estimates" places Maine as low as 40th in the nation in per pupil spending, and 41st in governmental spending for education per $1000 of personal income[11].

These rankings are not indicative of mismanaged schools with oversized administrations. Rather, the data indicates that Maine's culture of local control may in fact be an effective and efficient way to deliver instruction.

Leadership

Recently, a move has been afoot to reduce the number of school administrators in Maine. Currently, Maine School Management Association reports there are 92 full-time superintendents and 39 part-time

superintendents in Maine, with just fewer than 190,000 students. A popular comparison put forth by some is the state of Florida, with 67 superintendents and 2.7 million students[12]. The story that is not told, however, is the extensive organizational hierarchy that exists within Florida's schools, resulting in an administrative structure that far exceeds the size and complexity of Maine districts. Although there may be only one person with the title of superintendent, there are hundreds of others with titles such as Deputy Superintendent, Area Superintendent, Chief Academic Officer, and Accountability Officer.

Take, for example, Broward County Public Schools (BCPS), a district of approximately 270,000 students covering the greater Orlando region. It is true that BCPS has just one superintendent, but the district also has an organizational chart that is 17 pages long, with just under 1,400 administrators and more than 10,000 support staff[13]. When viewing this chart, it is clear that several layers of administration exist between the superintendent and the school principal, as opposed to the typical Maine school district, in which principals (and community members) report directly to the superintendent. Some of the administrative titles reporting to the superintendent in BCPS include:

- Chief of Staff
- Coordinator of Governmental Affairs
- Director of Legislative Affairs
- Chief School Performance Officer
- Director of Leadership Development
- Director of School Accountability
- Director of Service Quality
- Director of Coaching and Induction
- Strategic Partnerships Development Manager

No Maine school district includes these positions, or hundreds of others identified on the BCPS organization chart; they are positions created to perform work that, in Maine, remains the responsibility of the superintendent or one or two other central office administrators. The number of administrators and support staff in Broward County (11,751) approaches the number of instructional staff in the entire district (14,640)[14]. Clearly, BCPS recognizes that the work of leading the schools is complex and demanding, requiring many hands and much expertise. In fact, 44% of BCPS staff is classified as non-instructional personnel. By comparison, the typical Maine school districts of South Portland, RSU 14 (Windham/Raymond), and Yarmouth employ only 28% to 30% of staff in non-instructional positions.

A quick glance at another Florida district, Orange County Public Schools, reveals that the current superintendent previously served as Chief of Staff and Deputy Superintendent, providing oversight for various Area Superintendents – positions and layers that do not exist in any Maine school district. To believe that Florida has fewer senior-level administrators than Maine schools is to ignore the facts. The difference is that in Maine, as in many states, local control is a major consideration in how communities and schools are managed, and senior level administrators wear many hats, from Human Resources Director to Communications Manager to Accountability Officer; all positions that would be assigned to one or more persons for each community in a large, Floridian school district. The lesson to be learned

from Florida is not that one superintendent can effectively lead a district of 200,000 students; the lesson is that there is a great deal of administrative work to be done to efficiently operate a school district, and larger districts simply require more complex hierarchies to oversee the work. Here in Maine it is not only the quality of the work, but the relationships developed while completing that work, that make Maine schools more effective, and more efficient, than most others in the country.

Lest we forget the purpose of our public schools, it is important, also, to consider the same indicators of Florida's school performance that rank Maine schools among the best in the country at all levels. Florida's fourth graders, like those in Maine, score above the national average in mathematics, but by eighth grade Florida's performance ranks as low as 43rd in the nation[4]. A similar trend is seen in reading, where Florida's fourth graders perform above the U.S. average while their eighth grade students drop below the U.S. average (ranking 33rd). By the end of twelfth grade, Florida's 77.9% graduation rate ranks 41st in the nation[5]. These are not performances or trends that Maine residents will embrace for their own students. Higher percentages of non-instructional personnel and below-average performance for older students do not make Florida's model of mega-districts something Maine should emulate.

Local Control

There have been two major consolidation efforts in Maine in the past 60 years. The Sinclair Act of 1957 reduced by 40 percent the number of Maine school districts at that time, resulting in the regional districts with which most of us have been familiar for several decades. The Sinclair Act rewarded school units for consolidating, making construction and transportation funds available for communities electing to combine their small, local school districts into larger, regional districts. The success of the Sinclair Act is evidenced by the continued collaboration among the "School Administrative Districts" (or, S.A.D.'s) still in operation.

At the other end of the consolidation success spectrum is the school district reorganization law of 2007. This law sought to reduce the number of Maine school districts from 290 to 80. Rather than provide incentives for consolidating, as the Sinclair Act did, this law provided only penalties for those unwilling to join a larger district. In the end, the lowest number of school districts reached was 164 in 2011-12[15], and that number remains in flux, as several consolidated districts have splintered in the past four years. The difficulties faced by many of the newer, consolidated districts are a result of community disputes over funding, policy, and local control.

It is important that community leaders understand what they will give up if they accept being forced into a consolidated district. Community members will see their influence in their school's policies, curriculum, and funding diminished; locally elected officials will be stripped of their input into the budget process as the regional district simply submits its annual invoice to each town; and towns will begin fighting with one another – and with the regional school committee – as battle lines are drawn around the school funding formula. Experience has shown that projected cost savings will not come to fruition as collective bargaining agreements will be adjusted to the higher standard, not the lower, from the previously separate districts, and each community will share in the responsibility for others' pre-existing or developing concerns around facilities, technology, and curriculum.

Should Maine wish to adopt Florida's mega-district approach to school organization, we should do so fully understanding what it will mean for our students and our communities. It will not take long before school districts will create hierarchical structures similar to those currently in place in Florida. Simply put, the work needs to be done. The work can be done by one superintendent with 14 deputy superintendents and dozens of other administrative support personnel in a given county, or it can be done by 14 superintendents in that county working independently with their local communities and school committees – but, in the end, the work of financial planning, personnel management, instructional oversight, curriculum development, public relations, and performance accountability must be done. In Maine, the data show that the relationships and programming that are developed and refined in locally-controlled districts lead to better-performing schools. A move away from that arrangement will have its consequences in greater administrative overhead and diminished community input.

Conclusion

When one reads about failing schools in the national press, it is important to remember that the schools being discussed are typically found in large, urban areas of the country, with challenges far different from the schools here in Maine. Considering Maine's academic and financial data, the negative attention on schools seems particularly misdirected, as our schools out-perform the national average on a consistent basis.

If we want to sell Maine to potential business owners who will consider developments that grow our economy, increase employment, and raise wages, we should tell them about our safe, quality, locally-controlled public schools. If we want to preserve the efficiency, performance, and relational value of our schools, we should continue to promote regional cooperation while respecting the limited, local leadership structure that has proven to be more efficient than that of mega-districts found elsewhere.

It is time to look at the data and recognize that Maine schools are among the best in the country, with higher achievement and lower per pupil costs than most other states. It is time to celebrate our successes and acknowledge our efficiencies. It is time to advocate for Maine's public schools.

Sources

[1]Badenhausen, K. (2016). The Best and Worst States for Business. *Forbes.* Retrieved from http://www.forbes.com/sites/kurtbadenhausen/2016/11/16/the-best-and-worst-states-for-business-2016/#3a69896a112b.

[2]Kiersz, A. (2015). Ranked: The economies of all 50 US States and DC from Worst to Best. *Business Insider.* Retrieved from http://www.businessinsider.com/state-economy-ranking-july-2015-2015-7/%2347-missouri-5/.

[3]http://kff.org/other/state-indicator/median-annual-income/?currentTimeframe=0 The Henry J. Kaiser Family Foundation (2015). *Median Annual Household Income.* Retrieved from http://kff.org/other/state-indicator/median-annual-income/?currentTimeframe=0.

[4]National Center of Educational Progress (2014). *NAEP Subject Areas.* Retrieved from http://nces.ed.gov/nationsreportcard/subjectareas.aspx.

[5]Governing the States and Localities (2016). *High School Graduation Rates by State.* Retrieved from http://www.governing.com/gov-data/high-school-graduation-rates-by-state.html.

[6]The Annie E. Casey Foundation (2014). *Kids Count 2014 Data Book.* Retrieved from http://www.aecf.org/m/databook/aecf-2014kidscountdatabook-embargoed-2014.pdf.

[7]Morse, R. (2016). How States Compare in the 2016 Best High Schools Rankings. *U.S. News & World Report.* Retrieved from http://www.usnews.com/education/best-high-schools/articles/how-states-compare.

[8]Education Week (2016). *Quality Counts 2016.* Retrieved from http://www.edweek.org/media/grading-summary-education-week-quality-counts-2016.pdf.

[9]Governing the States and Localities (2016). *Education Spending Per Student by State.* Retrieved from http://www.governing.com/gov-data/education-data/state-education-spending-per-pupil-data.html.

[10]Klein, R. (2014). These Are The States With The Best And Worst School Systems, According to New Rankings. *The Huffington Post.* Retrieved from http://www.huffingtonpost.com/2014/08/04/wallethub-education-rankings_n_5648067.html.

[11]National Education Association (2016). *Rankings & Estimates.* Retrieved from http://www.nea.org/assets/docs/2016_NEA_Rankings_And_Estimates.pdf.

[12]Education Commission of the States (2016). *Fifty State Comparison: Local Superintendents.* Retrieved

from http://ecs.force.com/mbdata/mbquestRT?rep=K12G813.

[13]The School Board of Broward County (2016). *2015-2016 Organizational Chart.* Retrieved from https://www.browardschools.com/SiteMedia/Docs/District/2015-16OrgChartApprovedRevised072115_072215.pdf.

[14]Broward County Public Schools (2016). *Empowering Students, Strengthening Communities.* Retrieved from http://www.browardschools.com/SiteMedia/Docs/Info/pdf/BCPS-Community-Brochure.pdf.

[15]Fairman, J. & Donis-Keller, C. (2012). School District Reorganization in Maine: Lessons Learned for Policy and Process. *Maine Policy Review.* 21(2), 23-40. Retrieved from https://umaine.edu/edhd/wp-content/uploads/sites/54/2016/05/School-district-reorganization-in-Maine—Lessons-learned-for-policy-and-process.pdf.

FOR IMMEDIATE RELEASE
January 5, 2017

EPA Gives $3.8M to Help 19 Communities Plan New Uses for Former Brownfield Sites

Brownfields Area-Wide Planning funds support community revitalization

WASHINGTON – The U.S. Environmental Protection Agency (EPA) has selected 19 communities for approximately $3.8 million in funding to assist with planning for cleanup and reuse of Brownfield sites as part of the Brownfields Area-Wide Planning (AWP) program. Each recipient will receive up to $200,000 to engage their community and conduct planning activities for brownfield site reuse.

The grants will help communities plan improvements such as housing, transportation options, recreation and open space, education and health facilities, social services, renewed infrastructure, increased commerce and employment opportunities.

"The Area-Wide Planning grant program is an innovation initiated by the Obama Administration to empower communities to transform economically and environmentally distressed areas, including communities impacted by manufacturing plant closures, into vibrant future destinations for business, jobs, housing and recreation," said Mathy Stanislaus, Assistant Administrator for EPA's Office of Land and Emergency Management. "These grants provide the opportunity for communities to determine for themselves revitalization plans that best meet their vision and needs based on a rigorous analysis of market and infrastructure in a manner that benefits and does not displace long-term residents."

Assistant Administrator Stanislaus announced the new AWP recipients for funding at a community event in Norfolk, Va.

EPA'S AWP program was modeled after New York State's Brownfields Opportunity Area (BOA) Program, which was developed by communities – particularly lower income communities – to enable them to drive development that meets their needs without displacing them. Studies have shown that residential property values near brownfields sites that are cleaned up increased between 5 and 15 percent. Data also shows that brownfields clean ups can increase overall property values within a one-mile radius. Preliminary analysis involving 48 brownfields sites shows that an estimated $29 million to $97 million in additional tax revenue was generated for local governments in a single year after cleanup.

This year's selected recipients for funding are:

- Eastern Maine Development Corporation, Bucksport, Maine
- City of Providence, R.I.
- Isles, Inc., East Trenton, N.J.
- City of Wilmington, Del.
- Redevelopment Authority of the City of Harrisburg, Pa.
- City of Norfolk, Va.
- University of South Florida, Tampa, Fla.
- City of Middlesborough, Ky.
- Berkeley-Charleston-Dorchester Council of Governments, Charleston and North Charleston, S.C.
- Near East Area Renewal, Indianapolis, Ind.
- Wayne County Brownfield Redevelopment Authority, River Rouge, Mich.
- Lorain County, Lorain, Ohio
- Port of New Orleans, New Orleans, La.
- City of Burlington, Iowa
- Resource Conservation and Development for Northeast Iowa, Inc., Postville, Iowa

- City of Glenwood Springs, Colo.
- City of Orem, Utah
- Trust for Public Land, Los Angeles, Calif.
- City of Grants Pass, Ore.

More information on the funding recipients: https://www.epa.gov/brownfields/national-brownfields-area-wide-planning-grant-selected-proposal-descriptions

To apply for brownfields grants: https://www.epa.gov/brownfields/apply-brownfields-grant-funding

More information on the Partnership for Sustainable Communities: http://www.sustainablecommunities.gov/

R003

U.S. EPA Region 1 - Eastern Maine Development Corporation, Bucksport, ME

The Eastern Maine Development Corporation will work with the community and other stakeholders to develop an area-wide plan and implementation strategy for the former Verso Paper Mill project area. The 117-acre area, located on the Penobscot River, abuts the Town of Bucksport's residential and commercial center. The paper mill closed in 2014 and is currently vacant, and the project area also contains vacant buildings that once housed a tannery and a steel mill. The area-wide grant will be used to supplement ongoing planning efforts in the project area. It will include a market study that will analyze the local and regional market for the former mill space; analyze the mix of downtown and regional trade areas; evaluate opportunities; develop a strategy for retention, expansion, and recruitment; identify existing infrastructure in the mill complex; and create a green infrastructure plan that will consider developing the riverfront area and connecting it to downtown. The project is expected to build on and advance sustainable and equitable development opportunities that will greatly benefit the community, including increasing affordable transportation options, promoting equitable and affordable housing, enhancing economic competitiveness, and supporting the sustainable use of existing infrastructure. Key partners who will work with the Eastern Maine Development Corporation on this project include the Bucksport Bay Area Chamber of Commerce, Bucksport NEXT, Main Street Bucksport, and Bucksport Heart and Soul.

January 9, 2017

Bucksport Town Office
50 Main Street
Bucksport, ME 04416

To Whom It May Concern:

My name is Gregory Brown and I am a Park Ranger for the South Carolina Department of Parks Recreation and Tourism. I have earned a degree in Parks & Recreation Administration with a minor in Art from Wingate University located in Wingate, NC. I am a Certified Parks and Recreation Professional.

Recreation has always been a big part of my life and I have known since my first recreation class in college that I wanted to continue that interest in my career. Working for your community would be a dream come true for me. At the park I am currently employed. I work in a visitor center which is part exhibit, part gift shop, part information booth. In the last year I have taken over about eighty-five percent of the retail in the gift shop and managed to help increase revenue for this past year by sixty thousand dollars. I also tend to receiving inventory, imputing revenue numbers each night I work, answering all email inquiries to the park and other paperwork. I have had the pleasure of working with the public in several different environments as a labor foreman, bouncer, waiter, receiving associate, and intern for a gym.

Sports programs were a huge part of my development as a person. I now work well with others and independently because of my time on athletic teams. It is one of my biggest desires to help people have the same positive experience I did, by implementing youth programs that will continue throughout time to help children include activity into their daily lives and encourage teamwork, compassion, and friendship. I have experience in some small Special Olympics events hosted by my college football team. I have participated in buddy programs with local elementary schools. My competitive sports background ranges from wrestling, track and field, softball, soccer, rifle and shot-gun shooting, bowling and football. I also have experience in camping when I was a Boy Scout and later as an Eagle Scout. This has helped give me a diverse knowledge of the sports and recreation world. Getting people connected and working together is something I love doing. Living in different areas along the east coast has helped me learn how to communicate with all different types of people. Even though I have gained much experience with running activities and groups of people with my current and previous jobs new environments help make everyone better and what I would learn from your department, I know I would be an asset to the town. The position of Recreation Director for Bucksport stands to teach me much more than what I would learn just by sitting in a classroom.

I love the state of Maine and am very interested in relocating. My phone number is 704-242-0329 if you wish to call me to set up an interview. I look forward to hearing from you.

Sincerely,
Gregory O. Brown, CPRP
8170 Geer Hwy
Cleveland, SC 29635